Digital Video Recorder

XVR301-Q4 Series

Ultra 265 | Onvif | NDAA COMPLIANT NDAA Compliant

Features

- Support H.265/H.264 video formats
- Support audio over coaxial cable(only for TVI cameras)
- Support TVI, AHD, CVI, CVBS, IP cameras with adaptive access
- 4/8/16-channel BNC input
- Support 1-ch CVBS output, 1-ch VGA output, 1-ch HDMI output at up to 4K(3840 x 2160)
- HDMI and VGA simultaneous output
- Long transmission distance over coaxial cable
- Supports two-way audio when paired with specific front-end analog cameras.（UAC-B142-ACF28LM-DL, UAC-B142-ACF40LM-DL, UAC-T142-ACF28LM-DL, UAC-T142-ACF40LM-DL）

Specifications

Model	XVR301-04Q4	XVR301-08Q4	XVR301-16Q4
Video/Audio Input			
IP Video Input	2-ch	4-ch	8-ch
Analog Video Input	4-ch, BNC	8-ch, BNC	16-ch, BNC
Max IP Video Input	6-ch	12-ch	24-ch
Supported Analog Camera Types	Support AHD input: 8MP@15fps 5MP@20fps 5MP@12fps 4MP@30fps 4MP@25fps 4MP@15fps 1080P@30fps 1080P@25fps 720P@30fps 720P@25fps Support TVI input: 8MP@15fps 8MP@12fps 3K@20fps 5MP@20fps 5MP@12fps 4MP@30fps 4MP@25fps 4MP@15fps 1080P@30fps 1080P@25fps 720P@30fps 720P@25fps Support CVI input: 8MP@15fps 8MP@12fps 5MP@25fps 5MP@20fps 4MP@30fps 4MP@25fps 1080P@30fps 1080P@25fps 720P@30fps 720P@25fps Support CVBS input		
BNC Audio Input	4-ch, channel audio	8-ch, channel audio	16-ch, channel audio

RCA Audio Input	1-ch		
3.5mm Audio Input	N/A		
Video/Audio Output			
Video Output	Support 1-ch CVBS output, 1-ch HDMI, 1-ch VGA, VGA and HDMI simultaneous output		
HDMI Output	HDMI: 4K (3840 × 2160)/30 Hz, 1920 × 1080/60 Hz, 1920 × 1080/50 Hz, 1600 × 1200/60 Hz, 1280 × 1024/60 Hz, 1280 × 720/60 Hz, 1024 × 768/60 Hz		
VGA Output	VGA: 1920 × 1080/60 Hz, 1920 × 1080/50 Hz, 1600 × 1200/60 Hz, 1280 × 1024/60 Hz, 1280 × 720/60 Hz, 1024 × 768/60 Hz		
HDMI Standard	HDMI 1.4		
BNC Video Output	1-ch		
BNC Audio Output	4-ch, channel audio	8-ch, channel audio	16-ch, channel audio
RCA Audio Output	1-ch		
3.5mm Audio Output	N/A		
Live View Display	HDMI/VGA: 1/4/6/8/9	HDMI/VGA: 1/4/6/8/9/16	HDMI/VGA: 1/4/6/8/9/16/25
Default Num of Live Screen	VGA: 4; HDMI: 4	VGA: 8; HDMI: 8	VGA: 16; HDMI: 16
Playback Screen	1/4/9	1/4/9/16	1/4/9/16
Encoding/Decoding			
Recording Resolution	8MP Lite/3K Lite@12/5MP Lite/4MP Lite/1080P/720P/D1		
Recording Frame Rate	Main stream: 8MP Lite@8fps Sub stream: D1@8fps Third Stream: CIF@8fps Main stream: 3K Lite@12fps Sub stream: D1@12fps Third Stream: CIF@12fps Main stream: 5MP Lite@12fps Sub stream: D1@12fps Third Stream: CIF@12fps Main stream: 4MP Lite@15fps Sub stream: D1@15fps Third Stream: CIF@15fps Main stream: 1080P@15fps Sub stream: D1@15fps Third Stream: CIF@15fps Main stream: 720P@30fps Sub stream: D1@30fps Third Stream: CIF@30fps	Main stream: 8MP Lite@8fps Sub stream: D1@8fps Third Stream: CIF@8fps Main stream: 3K Lite@12fps Sub stream: D1@12fps Third Stream: CIF@12fps Main stream: 5MP@6fps Sub stream: D1@6fps Third Stream: CIF@6fps Main stream: 5MP Lite@12fps Sub stream: D1@12fps Third Stream: CIF@12fps Main stream: 4MP@15fps Sub stream: D1@15fps Third Stream: CIF@15fps Main stream: 1080P@15fps Sub stream: D1@15fps Third Stream: CIF@15fps Main stream: 720P@30fps Sub stream: D1@30fps Third Stream: CIF@30fps	Main stream: 8MP Lite@8fps Sub stream: D1@8fps Third Stream: CIF@8fps Main stream: 3K Lite@12fps Sub stream: D1@12fps Third Stream: CIF@12fps Main stream: 5MP@6fps Sub stream: D1@6fps Third Stream: CIF@6fps Main stream: 5MP Lite@12fps Sub stream: D1@12fps Third Stream: CIF@12fps Main stream: 4MP@15fps Sub stream: D1@15fps Third Stream: CIF@15fps Main stream: 1080P@15fps Sub stream: D1@15fps Third Stream: CIF@15fps Main stream: 720P@30fps Sub stream: D1@30fps Third Stream: CIF@30fps
Audio Sample Rate	8 kHz, 16 bit per channel		
Audio Bit Rate	64 Kbps per channel		
Decoding Capability	Analog: 4 x 8MP Lite@8, 4 x 3K Lite@12, 4 x 5MP Lite@12, 4x	Analog: 8 x 8MP Lite@8, 8 x 3K Lite@12, 8 x 5MP@6, 8 x 5MP	Analog: 16 x 8MP Lite@8, 16 x 3K Lite@12, 16 x 5MP@6,16 x

	4MP Lite@15, 4 x 1080P@15, 4 x 720P@30 IP: 1 x 4k@15,1 x 6MP@20,1 x 5MP@20,1 x 4MP@30, 1 x 3MP@30, 2 x 1080P@30, 4 x 720P@30	Lite@12, 8 x 4MP@15, 8 x 1080P@15, 8 x 720P@30 IP: 1 x 8MP@30, 1 x 6MP@30, 1 x 5MP@30, 2 x 4MP@30, 2 x 3MP@30, 4 x 1080P@30, 8 x 720P@30	5MP Lite@12, 16 x 4MP@15,16 x 1080P@15,16 x 720P@30 IP: 2 x 8MP@30, 2 x 6MP@30, 2 x 5MP@30, 4 x 4MP@30, 4 x 3MP@30, 8 x 1080P@30, 16 x 720P@30
Num of Concurrent Playback	8-ch	16-ch	32-ch
Num of Concurrent Playback in Local	4-ch	8-ch	16-ch
Coaxial Cable			
Analog camera Upgrade over Coaxial Cable	Support		
Audio over Coaxial Cable(Form)	4-ch, One-way Audio(TVI UNV)/One-way Audio(CVI UNV)	8-ch, One-way Audio(TVI UNV)/One-way Audio(CVI UNV)	16-ch, One-way Audio(TVI UNV)/One-way Audio(CVI UNV)
Two-way Audio			
Two-way Audio	1-ch (with IP Camera or specific Analog Camera)		
Analog Snapshot			
FTP/Schedule/Event Snapshot	Schedule/FTP/Event snapshot:6-ch snapshot, up to 3840*2160 resolution	Schedule/FTP/Event snapshot:12-ch snapshot, up to 3840*2160 resolution	Schedule/FTP/Event snapshot:24-ch snapshot, up to 3840*2160 resolution
Network			
Incoming Bandwidth	40Mbps (Up to 48Mbps after all analog channel conversion)	40Mbps (Up to 56Mbps after all analog channel conversion)	80Mbps (Up to 112Mbps after all analog channel conversion)
Outgoing Bandwidth	48Mbps	64Mbps	160Mbps
Max users can be added	32		
Remote Users	128		
Protocols	TCP/IP|P2P|UPnP|NTP|DHCP|HTTP|DNS|DDNS|SMTP|HTTPS	TCP/IP|P2P|UPnP|NTP|DHCP|HTTP|DNS|DDNS|SMTP|HTTPS	TCP/IP|P2P|UPnP|DHCP|NTP|HTTP|DNS|DDNS|SMTP|HTTPS
Browser(Plugin)	IE10, IE11, Chrome 45+, Edge 79+, Firefox 52+		
Browser(Plugin-Free)	Chrome 57+, Edge 16+, Firefox 58+, Safari 11+		
Smart			
Analog Smart by XVR	Ultra Motion Detection (UMD) , Face Detection, SIP (Intrusion Detection, Cross Line Detection, Enter Area, Leave Area)		
IP Smart by IPC	Face Detection|SIP (Intrusion Detection, Cross Line Detection, Enter Area, Leave Area)|Defocus Detection|Scene Change Detection|Auto Tracking|Object Left Behind|Object	Face Detection|SIP (Intrusion Detection, Cross Line Detection, Enter Area, Leave Area)|Defocus Detection|Scene Change Detection|Object Removed|Object Left Behind|Auto Tracking|People	Face Detection|SIP (Intrusion Detection, Cross Line Detection, Enter Area, Leave Area)|Defocus Detection|Scene Change Detection|Object Removed|Object Left Behind|Auto Tracking|People

	Removed|People Flow Counting	Flow Counting	Flow Counting
VCA Search	Face Search, Behavior Search, People Counting Report		
Smart Functions by XVR	1-ch (Face Detection)|2-ch (SIP)|4-ch (UMD)	1-ch (Face Detection)|4-ch (SIP)|8-ch (UMD)	2-ch (Face Detection)|4-ch (SIP)|16-ch (UMD)
Alarm			
General Alarm	Motion		
Alert Alarm	IP Conflict|Network Disconnected|Disk offline|Illegal Access|Disk Abnormal|Hard Disk Space Low|Hard Disk Full|Recording/Snapshot Abnormal	IP Conflict|Network Disconnected|Disk offline|Disk Abnormal|Illegal Access|Hard Disk Space Low|Hard Disk Full|Recording/Snapshot Abnormal	IP Conflict|Network Disconnected|Disk offline|Disk Abnormal|Illegal Access|Hard Disk Space Low|Hard Disk Full|Recording/Snapshot Abnormal
GUI Language			
GUI Language	38 languages: Simplified Chinese, Traditional Chinese, English, Vietnamese, Thai, Turkish, Spanish (Latin America), Portuguese (Brazil), Spanish, Portuguese, French, German, Italian, Dutch, Polish, Czech, Hungarian, Slovak, Russian, Hebrew, Arabic, Ukrainian, Estonian, Bulgarian, Greek, Romanian, Danish, Swedish, Norwegian, Finnish, Croatian, Slovenia, Serbia, Korean, Japanese, Latvian, Lithuanian, Persian		
Hard Disk			
SATA	1 SATA interface		
Capacity	Up to 16 TB for each HDD (The maximum HDD capacity varies with environment temperature)		
Disk Group	Support		
External Interface			
Network Interface	1 RJ45 10 M/100 M self-adaptive Ethernet Interface	1 RJ45 10 M/100 M self-adaptive Ethernet Interface	1 RJ45 10 M/100 M/1000 M self-adaptive Ethernet Interface
Network Working Mode	Single port, not involved		
USB	Rear panel: 2 × USB2.0	Rear panel: 2 × USB2.0	Rear panel: 1 × USB2.0, 1 × USB3.0
RS485	1		
RS232	N/A		
Alarm In	4-ch		
Alarm Out	1-ch		
Power Supply	DC 12 V/2 A	DC 12 V/2 A	DC 12 V/3 A
Power Switch	N/A		
Redundant Power Supply	N/A		
Buzzer	Support		
Working Environment			
Working Temperature	-10 ℃ to 55 ℃ (14 ℉ to 131 ℉)		
Working Humidity	≤ 90% RH (non-condensing)		
Power Consumption (without	≤ 7W	≤ 8W	≤ 12W

HDD)			
Heat Radiation	N/A	Radiator	Fan
Dimensions			
Weight (without HDD)	≤0.9Kg（1.98lb）		
Height	1U		
Dimensions	260mm × 226mm × 46.6mm (10.2" x 8.9" x 1.8")	260mm × 226mm × 46.6mm (10.2" x 8.9" x 1.8")	260mm × 251mm × 45.8mm (10.2" x 9.9" x 1.8")
Certification			
Certification	CE, FCC, UL, RoHS, WEEE		
CE	EN 55032, EN 61000-3-3, EN IEC 61000-3-2, EN 55035		
FCC	Part15 Subpart B		
Compliance			
NDAA Compliant	Support		
Feature supported			
Cruise lines num of each camera	4		
Preset num	32		
N+1 Hot Spare	N/A		
Fisheye Dewarping by IPC	N/A		
Fisheye Dewarping by NVR (Local)	N/A		
ANR	Support		
Downlink ONVIF	Support (Profile S)		
Uplink ONVIF	N/A		
UCS(Web socket)	N/A		
NAS	Support		
Ucode Basic Mode(Analog)	Support		
Ucode Basic Mode(IPC)	Support		
Ucode Advanced Mode(Analog)	Support		
Ucode Advanced Mode(IPC)	Support		
POS	N/A		
Control the Dual-light of UNV Analog Cameras under TVI	Support		
Output Mode	Support		

Dimensions

Aggregate product size diagram using XVR301-04Q4 as an example

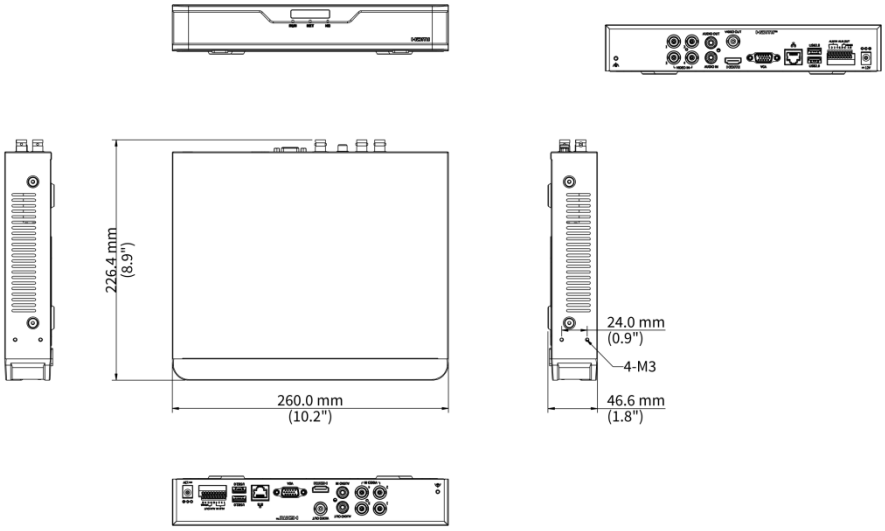
226.4 mm
(8.9")
260.0 mm
(10.2")
24.0 mm
(0.9")
4-M3
46.6 mm
(1.8")

Unlimited New View

Zhejiang Uniview Technologies Co., Ltd.

http://www.uniview.com

overseasbusiness@uniview.com; globalsupport@uniview.com

No. 369, Xietong Road, Xixing Sub-district, Binjiang District, Hangzhou City, 310051, Zhejiang Province, China

©2023-2025 Zhejiang Uniview Technologies Co., Ltd. All rights reserved.

*Product specifications and availability are subject to change without notice.

Despite our best efforts, technical or typographical errors may exist in this document. Uniview cannot be held responsible for any such errors and reserves the right to change the contents of this document without prior notice.