VTC-THT5R3/2

Transcendent Series 5 MegaPixel Indoor/Outdoor 4-in-1 Fixed Turret Camera

VITEK INDUSTRIAL VIDEO PRODUCTS, INC.

VITEKCCTV.COM
(888) VITEK-70

TRANSCENDENT

NDAA COMPLIANT · HD OVER COAX · MULTI FORMAT

KEY FEATURES

- 1/2.7" 5.0 Megapixel Progressive Scan CMOS Sensor
- NDAA Compliant
- High Definition Analog (HDA): HD-TVI & AHD: 5.0 MegaPixel / CVI: 4.0 MegaPixel / CVBS: 960H Video Output
- 3.6 or 2.8mm Fixed Lens
- Matrix with 100' IR Range
- Digital Wide Dynamic Range (D-WDR)
- True Mechanical Day/Night function by ICR
- 3D-DNR Noise Reduction
- IP67 Weather Resistance
- Supports Control over COAX (CoC)
- Over 1500' HD Video Transmission (Depending on cable characteristics and integrity)
- Optional Junction Boxes (VT-TJB01, VT-TJB08) and Wall Mount (VT-TWMT-3) Available *See other mounting options below
- Available in Ivory or Charocal Grey (VTC-THT5R3B/2B)
- 12VDC Operation
- 3-Year Warranty

SPECIFICATIONS

Image Sensor	1/2.7" 5.0 Megapixel Progressive Scan CMOS Sensor
Signal System	PAL / NTSC
Effective Pixels	2560 x 1936
Resolution	HD-TVI & AHD: 5.0 MegaPixel / CVI: 4.0 MegaPixel / CVBS: 960H
Video Output	HD-TVI / AHD / CVI / CVBS (Selectable)
Lens	3.6 or 2.8mm - Fixed
Day/Night	True Day/Night by ICR
Min. Illumination	Color: 0.01 lux@F1.2, AGC ON / B/W: 0 lux (with IR ON)
IR LEDs	1 Matrix
IR Distance	Up to 100'
S/N Ratio	≥52 dB (AGC Off)
WDR	Digital WDR
Noise Reduction	Digital Noise Reduction (D-DNR)
White Balance	Auto (AWB)
BLC, LSC, HLC	YES
Control over COAX (COC)	YES
Transmission Distance	Up to 1500' (Depending on cable characteristics & integrity)
Power Input	12VDC
Power Consumption (12VDC)	IR Off: 100mA / IR On: 350mA
Resistance Rating	IP67
Operation Conditions	-4°~122° / 10%~90% Humidity
Weight	14.81 oz. / .93 lbs. / 420g
Dimensions	3.77" × 4.25" (95.7 × 108mm)

ACCESSORIES

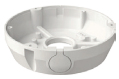

VT-TJB01 *Optional Junction*

VT-TJB08 *Optional Junction Box*

VT-TWMT-3 *Optional Wall Mount*

VT-TPDMT-A1 *Indoor Pendant Mount - reqs. VT-TJB08*

VT-TPDM-2 *Outdoor Pendant Mount - reqs. VT-TJB01*

VT-TWMT-A1 *Optional Wall Mount - reqs. VT-TJB08*

VT-TPLMT *Univeral Pole Mount - reqs. VT-TWMT-A1 +VT-TJB08*

VT-TCNMT *Univeral Corner Mount - reqs. VT-TWMT-A1 +VT-TJB08*

VT-TR4VPK *Video and Power Balun Transmitter / Receiver Pair for HD-TVI / AHD / CVI for Distances Up to*

VT-TR4K *Passive Video Balun Transmitter / Receiver Pair for HD-TVI / AHD / CVI for Distances Up to 1440'*

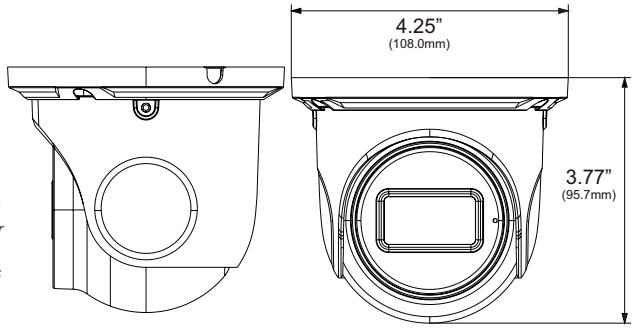

RECORDERS

Pair with VITEK Transcendent Series 5-in-1 Digital Video Recorders Supporting HD-TVI / AHD / CVI / IP / 960H Cameras!

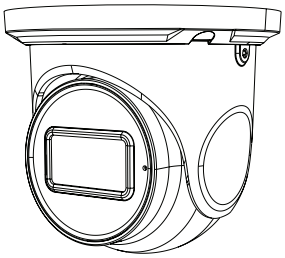

SINCE 1997

An Eye On Innovation