PDN6CEI445H-XR

4MP 45× Starlight IR PTZ AI Network Camera



Featuring powerful optical zoom and accurate pan/tilt/zoom performance, this camera can provide large monitoring range and great detail. The camera has very excellent low light performance due to adopting the latest starlight technology. The camera is equipped with smooth control, high quality image and good protection, which make it can meet most of the requirements of video surveillance applications.



MODEL(S) AVAILABLE

PDN6CEI445H-XR

KEY FEATURES

- 1/2.8” 4MP STARVIS™ CMOS
- Powerful 45× optical zoom
- Starlight
- 120 dB true WDR
- Max. 4MP @ 25/30 fps
- Deep-learning-based auto tracking and perimeter protection
- Max. IR distance: 820 ft (250 m)
- IP67, IK10 protection

Product Specifications

Camera	
Image Sensor	1/2.8" 2MP progressive scan STARVIS™ CMOS
Image Resolution	2560 (H) × 1440 (V)
ROM	N/A
RAM	N/A
Electronic Shutter	1 s ~ 1/30,000 s
Minimum Illumination	0.005 Lux @ F1.6 (Color) 0.0005 Lux @ F1.6 (B/W) 0 Lux (IR on)
S/N Ratio	N/A
IR LEDs	6
IR Distance	820 ft (250 m)
Illuminator On/Off Control	Auto / Manual
Lens Type	Motorized
Focal Length	3.95 ~ 177.75 mm
Angle of View	Horizontal: 70.3° ~ 1.8° Vertical: 37° ~ 1° Diagonal: 69.3° ~ 2°
Max. Aperture	F1.6
Close Focus Distance	0.03 ~ 9.82 ft (10 mm ~ 3000 mm)

PTZ	
Pan / Tilt Range	Pan: 0°~360° endless / Tilt: -20°~90° auto flip 180°
Manual Control Speed	Pan: 0.1°~260° / s; Tilt: 0.1°~120° / s
Preset Speed	Pan: 300° / s; Tilt: 200° / s
Presets	300
PTZ Mode	5 Patern, 8 Tour (up to 32 preset per tour), Auto Pan, 5 Auto Scan
Speed Setup	Human-oriented focal Length / speed adaptation
Power up Action	Auto restore to previous PTZ and lens status after power failure
Idle Motion	Activate Preset/Scan/Tour/Pattern if there is no command in the specified period
Protocol	DH-SD, Pelco-P/D (Auto recognition)

Inteligence	
Perimeter Protection	Tripwire, Intrusion. Support alarm triggering by types (Human & vehicle); Filtering out false alarms caused by animals, rustling leaves, bright lights, etc.
Auto Tracking	Support
Video Structuralization	Support human, motor vehicle and non-motor vehicle image capture
Event Trigger	Motion detection, Video tampering, Scene changing, Network disconnection, IP address conflict, Illegal Access, Storage anomaly
Advanced Intelligent Function	Object Abandoned / Missing

Video Standard	
Video Compression	H.265+/H.265/H.264+/H.264/MJPEG (Sub Stream)
Smart Codec	N/A
Video Frame Rate	**Main stream:** 4M/3M @ 25/30 fps, 1080P/1.3M/720P @ 25/30 fps
Video Frame Rate	**Sub stream 1:** D1/CIF @ 25/30 fps **Sub stream 2:** 1080P/720P @ 25/30 fps
Streaming Capability	3 Streams
Resolution	4M (2560×1440) / 3M (2048×1536) / 1080P (1920×1080) / 720P (1280×720) / D1 (704×576/704×480) / CIF(352×288/352×240)
Bit Rate Control	CBR; VBR
Video Bitrate	H264/H.265: 3 Kbps ~ 20480 Kbps
Day / Night	Auto (ICR) ; Color; B/W
BLC Mode	Yes
HLC Mode	Yes
Wide Dynamic Range	120 dB true WDR
White Balance	Auto / ATW / Indoor / Outdoor / Manual
Gain Control	Auto / Manual
Digital Noise Reduction	Ultra DNR (2D/3D)
Motion Detection	Yes
Region of Interest	Yes
Electronic Image Stabilization	Yes
Smart Illumination	N/A
Defog	Yes
Privacy Masking	Yes (Up to 24 areas)

Network & Interface	
Ethernet	RJ-45 (10/100 Base-T)
Network Protocol	IPv4/IPv6, HTTP, HTTPS, SSL, TCP/IP, UDP, UPnP, ICMP, IGMP, SNMP, RTSP, RTP, SMTP, NTP, DHCP, DNS, PPPOE, DDNS, FTP, IPFilter, QoS, Bonjour, 802.1x
Network Interoperability	ONVIF (Profile S/G); API
Streaming Method	Unicast / Multicast
Network Max. Users	20
Storage	Micro SD Card Slot (support max. 256 GB); NAS
Web Viewer	IE, Chrome, Firefox, Safari
Management Software	Smart PSS / DSS / DMSS
Mobile	iOS / Android
Audio I/O	1/1
Alarm I/O	7/2
Audio Compression	G.711a/G.711Mu/G.722/G.726/AAC/G.729/MPEG2-L2
RS485	1
Built-in Mic	N/A
Built-in Speaker	N/A

General	
Power Supply	24 V AC / 3 A (±25%), PoE+ (802.3af)
Power Consumption	< 13 W; < 26 W (IR on, Heater on)
Operating Temperature	-40°C ~ 70°C (-40°F ~ 158°F) / ≤ 95% RH
Protection	IP67, IK10
Casing	Metal
Dimensions	337.4 mm × ø 209.0 mm (13.28" × ø 8.23")
Net Weight	5900 g (13.0 lb)
Gross Weight	9600 g (21.16 lb)
Certifications	CE: EN55032/EN55024/EN50130-4 FCC: Part15 subpartB, ANSI C63.4-2014

Product Accessories



PFA120



PFA150

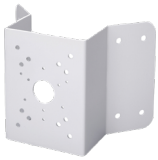

PFA151



PFB303S



PFB300C



PFA111

Product Dimensions (mm [inch])

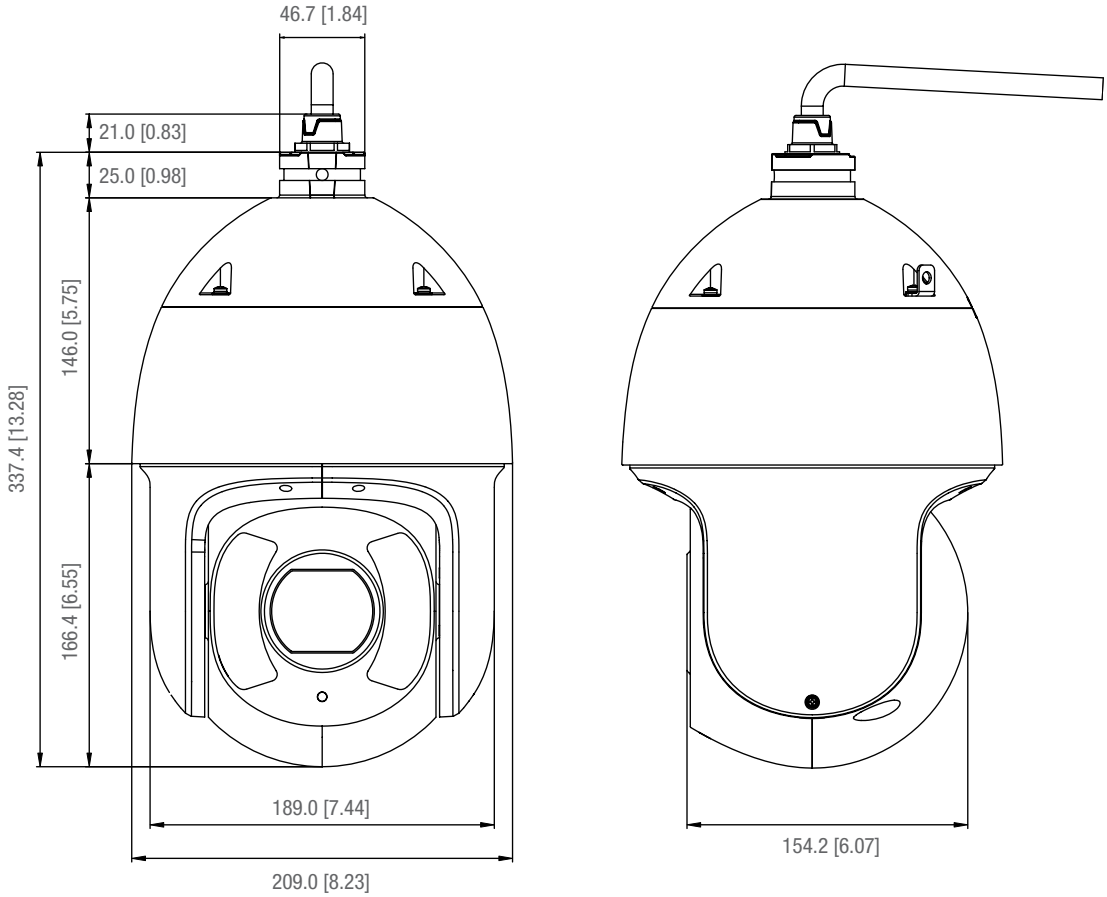

Plainview, NY
50 Commercial St., Plainview, NY 11803
Tel: 516-870-3779

Downtown LA, CA
1113 Venice Blvd., Los Angeles, CA 90015
Tel: 213-218-2260

Miami, FL
1604 NW 84 Ave., Doral, FL 33126
Tel: 786-410-6777

College Point, NY
129-04 14th Ave., College Point, NY 11356
Tel: 718-939-2710

San Francisco, CA
41324 Christy St., San Francisco, CA 94538
Tel: 510-584-9007

Chicago, IL
873 Cambridge Dr., Elk Grove Village, IL 60007
Tel: 847-584-2227

Brooklyn, NY
9017 5th Ave., Brooklyn, NY 11209
Tel: 347-507-5533

Houston, TX
1720 Townhurst Dr., Houston, TX 77043
Tel: 430-702-0999

City of Industry, CA
525 Parriott Pl., City of Industry, CA 91745
Tel: 626-961-8999

Dallas, TX
12901 Valley Branch Ln., Farmers Branch, TX 75234
Tel: 972-996-1600