Junction Box (Standard Size Dome or Mini Size Turret)

LUM-J02

Key Features

- For Select Standard Size Dome (N5D, N3D) and Mini Turret (N5T, N3T, N4T) Cameras
- Aluminum Construction
- Dimensions: Φ122.0 mm x 34.2 mm (Φ4.80 in. x 1.35 in.)
- Max. Load Capacity: 2.2 lb (1.0 kg)

Learn More

View the accessory selector for all mount options.

Specifications

Weight	0.2 kg (0.5 lb)
Load Bearing Capacity	1.0 kg (2.2 lb)
Material	Aluminum
Color	White
Thread Size	M20 (G1/2")
Dimensions	Φ122.0 mm x 34.2 mm (Φ4.80 in. x 1.35 in.)

Dimensional Drawing

mm [in.]

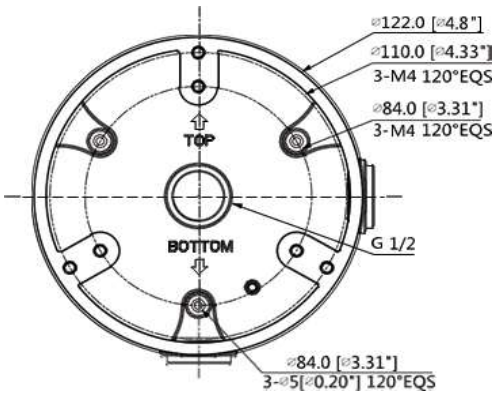

Bottom View

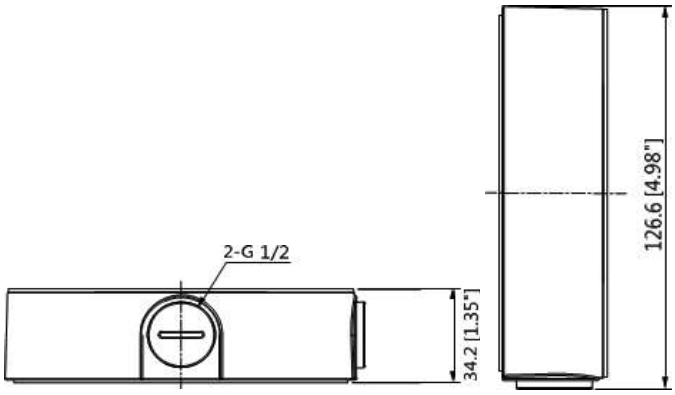

Side View

Rev. 1 | © 2026 Luminys Systems Corporation. All rights reserved. Design and specifications are subject to change without notice.