62455

ITEM NO.	PART NUMBER	DESCRIPTION	MATERIAL	FINISH	QTY.
1	62456	CABLE TIE MOUNT .11"(2.8mm) X .25"(6.3mm) SLOT	POM-BLACK POLYOXYMETHYLENE		1
2	82011	5 LB. MAGNET ASSY	CUP-MILD STEEL MAGNET-NdFeB N45M	CUP-ZINC MAGNET-NiCuNi	1

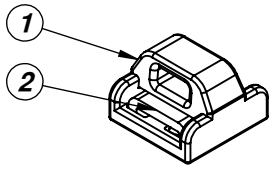

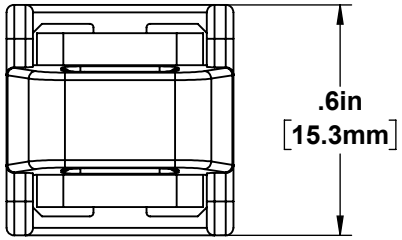

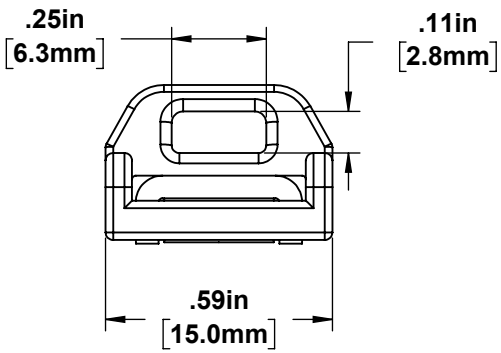

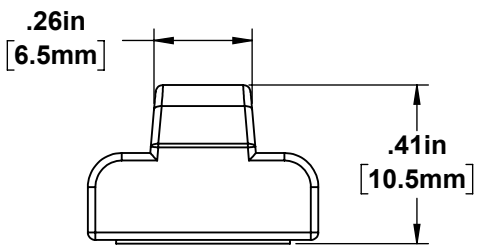

UL LISTING Mini Magnet Assembly		
ANSI/UL 62275	Positioning Devices TYPE 21 E359769	Mechanical Tensile Strength: 5 LBS. (22N)
CAN	CSA-C22.2 No. 62275	
ALL TESTING PERFORMED USING 3mm MIN. THICK 1008-1010 STEEL PLATE		

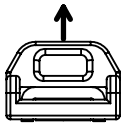

TENSILE PULL DIRECTION

INDOOR USE RECOMMENDED

OPERATING TEMPERATURE; -40° - 176° F (-40°- 80°C)

Please read before use! Disclaimer: Mag Daddy neither assumes nor accepts any liability for damages resulting from the handling or use of magnets. With your purchase, the buyer confirms that you have read and understand the following warnings: the buyer agrees that he/she is responsible for all damages/injuries caused by the magnets, which includes personal injuries, property damages or magnet damages. The buyer must agree with the terms before purchase. Pull forces we have provided are estimates only, we are not responsible for any inaccuracy of the magnet pull force. *Please test the pull force before any usage.* Magnets are very strong. Handling them with care is necessary to prevent personal injuries, property damages and magnet damages.
CAN BE HARMFUL TO PACEMAKER WEARERS and others with MEDICAL IMPLANTS.

CONFIDENTIAL:
USE OF THIS DRAWING WITHOUT WRITTEN AUTHORIZATION BY MAG-DADDY, LLC IS PROHIBITED.

INCH / MM ✓	SCALE: 1.5:1	Sheet Size: A	
GENERAL TOLERANCE UNLESS OTHERWISE SPECIFIED: ± .020 (.51mm) ANGLES: ± 5°	THIRD ANGLE PROJECTION	MAG DADDY MAGNETIC FASTENERS magdaddyusa.com 295 Jamie Ln. Wauconda, IL 60084 www.magdaddyusa.com PH:(847) 719-5600	
	APV.	Rev: 02	DWN. SS / DATE: 06/19/2023
MATERIAL: SEE BOM	PART DESCRIPTION: MINI MAGNETIC CABLE TIE MOUNT BLACK/SILVER, 5LBS.	PART NO. 62455	

LAST PRINT DATE: 6/19/2023