62401

ITEM NO.	PART NUMBER	DESCRIPTION	MATERIAL	FINISH	QTY.
1	62429	1/2" CABLE HOLDER, WHITE	POM-WHITE (NATURAL) POLYOXYMETHYLENE		1
2	82007W	10LB., N35M Ø.75" (19mm) O.D. MAGNET MOUNT Ø.256" (6.5mm) HOLE, WHITE	CUP-CRS DC01 MAGNET-NdFeB 35M	CUP-WHITE EPOXY MAGNET-NiCuNi	1

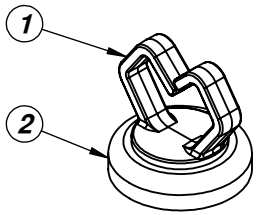

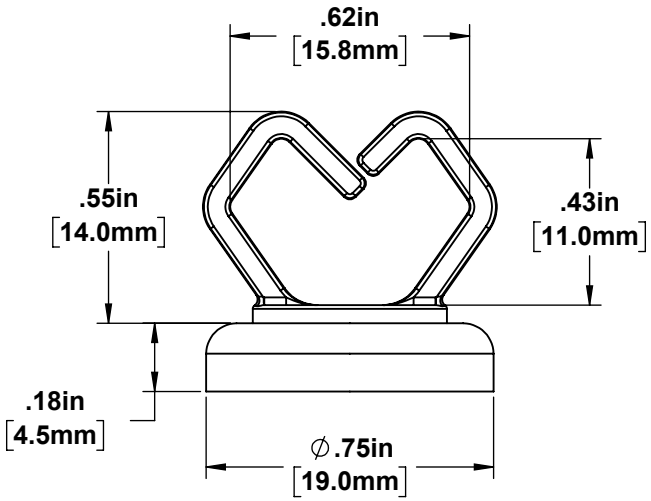

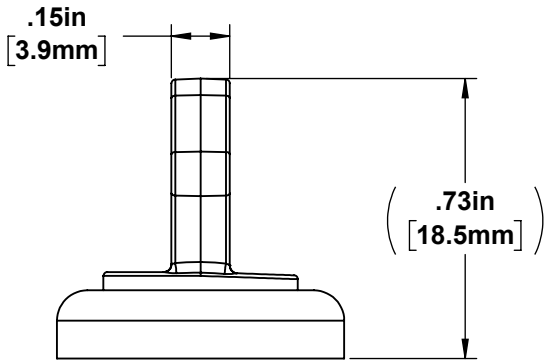

UL LISTING Magnetic Cable Holder 1/2"		
ANSI/UL 1565	Positioning Devices TYPE 21 E359769	Mechanical Tensile Strength: 10 LBS. (45N) No Load Rating
CAN	CSA-C22.2 No. 18.5	
ALL TESTING PERFORMED USING 3mm THICK 1008-1010 STEEL PLATE		

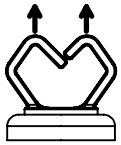

TENSILE PULL DIRECTION

INDOOR USE RECOMMENDED

OPERATING TEMPERATURE; -40° - 176° F (-40°- 80°C)

PLENUM RATED

Suitable in air handling systems

Please read before use! Disclaimer: Mag Daddy neither assumes nor accepts any liability for damages resulting from the handling or use of magnets. With your purchase, the buyer confirms that you have read and understand the following warnings: the buyer agrees that he/she is responsible for all damages/injuries caused by the magnets, which includes personal injuries, property damages or magnet damages. The buyer must agree with the terms before purchase. Pull forces we have provided are estimates only, we are not responsible for any inaccuracy of the magnet pull force. *Please test the pull force before any usage.* Magnets are very strong. Handling them with care is necessary to prevent personal injuries, property damages and magnet damages.

CAN BE HARMFUL TO PACEMAKER WEARERS and others with MEDICAL IMPLANTS.

CONFIDENTIAL: USE OF THIS DRAWING WITHOUT WRITTEN AUTHORIZATION BY MAG-DADDY, LLC IS PROHIBITED.

INCH ✓ MM | SCALE: 2:1 | Sheet Size: A

GENERAL TOLERANCE: UNLESS OTHERWISE SPECIFIED: ± .020 (.51mm) ANGLES: ± 5°

THIRD ANGLE PROJECTION

MAG DADDY MAGNETIC FASTENERS magdaddyusa.com
295 Jamie Ln. Wauconda, IL 60084
www.magdaddyusa.com PH:(847) 719-5600

APV. | Rev: 01 | DWN. SS | DATE: 09/01/2023

MATERIAL:	PART DESCRIPTION:	PART NO.
SEE BOM	1/2" MAGNETIC CABLE HOLDER 10 LBS. WHITE	62401

LAST PRINT DATE: 9/1/2023